# Low-Cost Industrial Digital I/O – 150 V

## NI 6521

- 8, ±30 VDC digital inputs with 60 V channel-to-channel isolation
- 8 nonlatching mechanical relay outputs
- 150 V AC/DC maximum switching voltage with maximum switching current of 2 A and maximum switching power of 60 W
- UL listed: UL 61010-1 (IEC 61010-1)
- High-reliability industrial feature set includes isolation, programmable power-up states, digital filtering, watchdog timers, and change detection
- NI measurement services software for highest productivity and performance

### Operating Systems

- Windows 2000/NT/XP
- LabVIEW Real-Time

### Recommended Software

- LabVIEW
- LabWindows/CVI
- Measurement Studio

### Other Compatible Software

- C, C++
- Microsoft Visual Studio .NET 2003

### Measurement Services Software (included)

- NI-DAQmx driver, Version 7.5 or later

### Safety

| | | INPUT | | | | OUTPUT | | | | |
|---|---|---|---|---|---|---|---|---|---|---|
| Product | Bus | Inputs | Isolation | Low Threshold | High Threshold | Mechanical Relay Outputs | Max Voltage | Max Current | Max Power | Industrial Feature Set |
| NI 6521 | PCI, PXI | 8 | 60 V channel-to-channel | ±4 VDC | ±11 VDC | 8 | 150 V AC/DC | 2 A | 60 W | ✓ |

## Overview and Applications

The National Instruments 6521 products are industrial digital I/O devices with eight channel-to-channel isolated digital inputs and eight nonlatching mechanical relay outputs. You can use the eight differential, isolated, ±30 VDC digital inputs to read the status of sensors, actuators, and logic devices. You can use the bipolar digital input channels to read from both sinking and sourcing devices. NI 6521 devices register a logic low if the voltage is between ±4 V, and register a logic high if the voltage is less than -11 V or greater than +11 V.

NI 6521 devices offer three single-pole double-throw (SPDT) Form C relays and five single-pole single-throw (SPST) Form A relays. You can use NI 6521 relay outputs to switch devices requiring up to 150 V AC/DC. NI 6521 relay outputs have maximum current rating of 2A and maximum switching power of 60 W.

***Note:*** *The switching current is limited by the maximum switching power and maximum voltage. (current = power/voltage)*

NI 6521 devices offer completely programmable configuration and do not require setting up jumpers or DIP switches. These devices are ideal for use with a programmable automation controller (PAC) for automotive test, industrial monitoring, and control applications. With high-current drive, high-voltage outputs, and isolation, you can connect the digital I/O module directly to a wide array of industrial electronic devices, sensors, and actuators.

NI 6521 devices take advantage of NI-DAQmx measurement services software (Version 7.5 or later) to speed up application development with many helpful features such as DAQ Assistant, automatic code generation, and high-performance multithreaded streaming technology.

## Safety

- UL listed: UL 61010-1 (IEC 61010-1)
- Keyed connector
- Insulation covers
- Complete software configuration
- High-voltage accessories

NI 6521 devices are UL listed and require the use of a keyed connector to prevent high-voltage signals from accidentally being connected to a low-voltage device. For added safety, PCI-6521 includes insulation covers on both sides of the board to prevent the user from coming in contact with high-voltage traces. Complete software configuration means that the user at no point is required to come in the vicinity of high-voltage traces. Several low-cost, high-voltage accessory options are available to ensure safe operation.

### Isolation

Channel-to-channel . . . . . .60 VDC continuous[1]
Channel-to-bus . . . . . .150 VDC continuous[2]
Channel-to-earth . . . . . .150 VDC continuous[3]

[1] *Verified by 620 $V_{rms}$ dielectric withstand test, 5 s*
[2] *Verified by 1400 $V_{rms}$ dielectric withstand test, 5 s*
[3] *Verified by 850 $V_{rms}$ dielectric withstand test, 5 s*

# Hardware

## High-Reliability Industrial Feature Set

NI 6521 devices offer a set of high-reliability features designed for demanding automation applications:

- Isolation provides an extended voltage range for direct connection to industrial sensors and actuators
- Programmable power-up states provide safe operation when connected to pumps/valves/motors/relays
- Watchdog timer detects computer or application crashes and ensures safe recovery to know digital I/O states
- Change detection triggers your application and returns I/O data after a digital event to minimize processor usage
- Programmable input filters eliminate glitches/spikes and remove noise

## Direct Sensor Connection with Isolation

Isolation, a form of built-in signal conditioning, provides several advantages such as an extended voltage range for direct connection to industrial sensors and actuators. Isolation also improves signal quality and protects computer circuitry. NI 6521 devices provide channel-to-channel isolation where every channel is physically and electrically separated from the others. This isolation breaks ground loops, improves common-mode voltage and noise rejection, and permits the two parts of the circuit to be at different voltage levels. Many industrial applications require isolation to protect the electronics from transient voltage spikes and provide greater common-mode noise rejection in electrically noisy environments containing machinery and inductive loads.

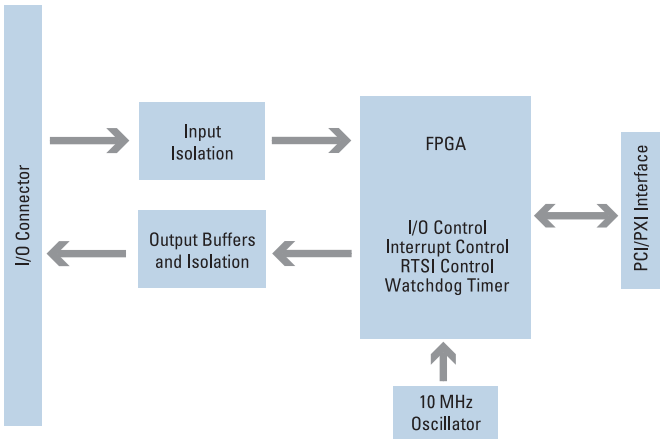


*Figure 1. NI 6521 Hardware Block Diagram*

## Glitch-Free Startup with Programmable Power-Up States

Using programmable power-up states, you can configure the initial NI 6521 output states in software to ensure glitch-free operation when connected to industrial actuators such as pumps, valves, motors, and relays. NI 6521 devices hold these known safe I/O states after receiving power, while your computer boots and your software application can begin running. Programmable power-up states are glitch-free, meaning the outputs never go through an incorrect state during power up.

You can configure each individual output line as logic high or logic low. NI 6521 devices store the settings in onboard nonvolatile memory and implement the power-up states automatically after power is applied to the device.

## Watchdog Timers for Fault Detection and Recovery

Watchdog timers are an innovative technology that provide protection against a wide variety of fault conditions:

- Computer crash – total OS crash
- Application crash – software application ceases to respond
- Driver crash – device driver ceases to respond
- PCI bus failure – communications cease to respond

With watchdogs, the digital outputs go to a safe state when a fault condition is detected. Watchdogs are important whenever the module is connected to actuators such as pumps, valves, motors, and relays. NI 6521 devices monitor the software application; if the application fails to reset the watchdog timer within the time limit, the device automatically sets the output lines to a user-defined safe state. NI 6521 devices remain in the watchdog state until the watchdog timer is disarmed by the application and new I/O values are written, the NI 6521 is reset, or the computer is restarted.

## Trigger Your Application with Change Detection

With change detection, you can automatically trigger your software application to perform a digital read operation upon a digital change of state. A digital change of state is defined as the rising edge (0 to 1 transition) or falling edge (1 to 0 transition) on one or more digital lines. To minimize the effects of noisy input lines, use programmable input filters in combination with change detection to eliminate spurious change detection events caused by noise or glitches. NI-DAQmx also includes multithreaded streaming technology so digital change detection events can occur independent of other data acquisition activities such as analog input or output events.

Using change detection, you can monitor for digital events with minimal processor usage. No polling is necessary because the digital I/O module generates an interrupt to automatically wake up your application. Using NI-DAQmx software technology, the NI 6521 devices notify the software application when the event is detected, causing the application to automatically perform a read operation.

## Eliminate Noise with Programmable Input Filters

Programmable input filters remove noise, glitches, and spikes on input, and provide debouncing for digital switches and relays. This feature is important for applications in noisy industrial environments to prevent false readings caused by noise. You can configure the programmable input filter for each digital line by setting the filter time in seconds. Any digital noise, glitch, or spike that is shorter than half of the specified filter time is blocked by the digital I/O device, preventing invalid readings and false triggers for change detection events.

## Relay Forms

Relays are classified by number of poles and number of throws. The pole of a relay is the terminal common to every path. Each position where the pole can connect is called a throw. A relay can be made of *n* poles and *m* throws. A single-pole single-throw (SPST) relay has one pole and one throw. A single-pole double-throw (SPDT) relay has one pole and two throws.

Single-Pole Single-Throw (SPST) Relay

Single-Pole Double-Throw (SPDT) Relay

*Figure 2. Relay Diagrams*

| Form | Symbol | Description |
|---|---|---|
| Form A |  | SPST relay with a normally open default state |
| Form C | 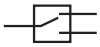 | SPDT relay that breaks the connection with one throw before making contact with the other (break-before-make) |

*Table 1. Relay Descriptions*

### Nonlatching Relays

A nonlatching relay has a power-off initial position of normally closed (NC). This position is maintained by the force of a spring or permanent magnet while no current flows. The normally open (NO) contact is maintained by the force of a magnetic field while current flows through the coil. When the current stops, the relay reverts back to its initial NC position. Nonlatching relays return to the default NC position in case of a fault or power failure. This feature is particularly useful when controlling a motor or valve where the motor or valve needs to be turned off in case of power failure or fault.

## Software

### NI-DAQmx Software Technology

NI 6521 devices require and are shipped with NI-DAQmx driver software, Version 7.5 or later. NI-DAQmx software is also available for download from **ni.com/downloads**. With NI-DAQmx, you can use your NI digital I/O device in NI LabVIEW, ANSI C, Microsoft Visual C++, and the Microsoft .NET languages C# and Visual Basic .NET.

Using NI-DAQmx technology, you can access the full functionality and state-of-the-art hardware technology of your NI 6521 digital I/O devices. NI-DAQmx technology speeds up your development with many features such as automatic code generation to make configuration and programming easy. The NI 6521 devices take full advantage of key NI-DAQmx software technologies such as multithreaded streaming technology for dramatic improvements in I/O performance and ease of use.

- Use DAQ Assistant to guide you to fast, accurate measurements with no programming.
- Use automatic code generation to create your application in LabVIEW, C, Visual Basic .NET, or C#.
- Take advantage of multithreaded streaming technology for 1,000X performance improvements.
- Use automatic timing, triggering, and synchronization technology to make advanced applications easy.
- Visit **ni.com** for more than 3,000 FREE software downloads to jump-start your project.
- Use the NI-DAQmx functions for software configuration of all digital I/O features without hardware switches/jumpers.
- Develop your application with easy and open programming in LabVIEW, ANSI C, Microsoft Visual C++, C#, and Visual Basic .NET.

## Low-Cost 37-Pin Accessories

Several low-cost, high-voltage accessory options are available for connecting to the 37-pin D-Sub connector of NI 6521 devices. NI 6521 devices ship with an accessory safety kit for keying connectors.

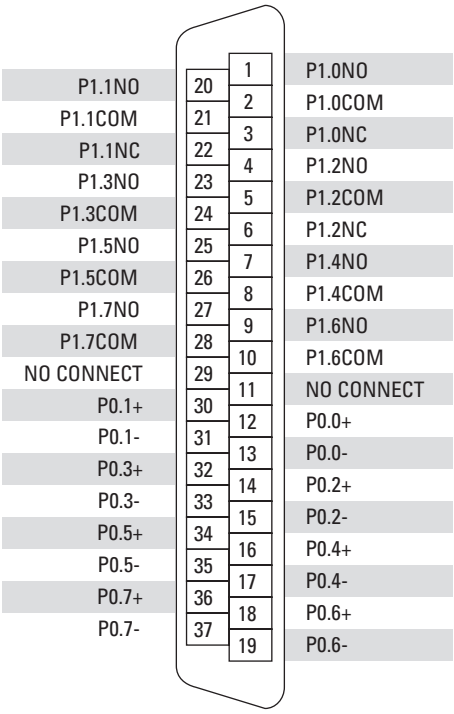


*Figure 3. NI 6521, 37-Pin D-Sub I/O Connector*

## Ordering Information

NI PCI-6521 ..... 779312-01
NI PXI-6521 ..... 779313-01
Additional Accessory Safety Kit ..... 779445-01

| Family | Accessory | Cable |
|---|---|---|
| NI 6521 | CB-37F-HVD (779491-01) | SH37F-37M (778621-01, 778621-02) |
| | (PXI Only) TB-2621 (779444-01) | – |
| | TB-37F-37CP (779185-01) | – |

Includes NI-DAQmx 7.5 or later

For information on extended warranty and value added services, visit **ni.com/services**.

***BUY NOW!***

For complete product specifications, pricing, and accessory information, call (800) 813 3693 (U.S.) or go to **ni.com/daq**.

*CB-37F-HVD*

*TB-2621*

*SH37F-37M*

*TB-37F-37CP*

# NI Services and Support


NI has the services and support to meet your needs around the globe and through the application life cycle – from planning and development through deployment and ongoing maintenance. We offer services and service levels to meet customer requirements in research, design, validation, and manufacturing. Visit **ni.com/services**.

## Training and Certification

NI training is the fastest, most certain route to productivity with our products. NI training can shorten your learning curve, save development time, and reduce maintenance costs over the application life cycle. We schedule instructor-led courses in cities worldwide, or we can hold a course at your facility. We also offer a professional certification program that identifies individuals who have high levels of skill and knowledge on using NI products. Visit **ni.com/training**.

## Professional Services

Our Professional Services Team is comprised of NI applications engineers, NI Consulting Services, and a worldwide National Instruments Alliance Partner program of more than 600 independent consultants and integrators. Services range from start-up assistance to turnkey system integration. Visit **ni.com/alliance**.

NATIONAL INSTRUMENTS™
Certified Alliance Partner

## OEM Support

We offer design-in consulting and product integration assistance if you want to use our products for OEM applications. For information about special pricing and services for OEM customers, visit **ni.com/oem**.

## Local Sales and Technical Support

In offices worldwide, our staff is local to the country, giving you access to engineers who speak your language. NI delivers industry-leading technical support through online knowledge bases, our applications engineers, and access to 14,000 measurement and automation professionals within NI Developer Exchange forums. Find immediate answers to your questions at **ni.com/support**.

We also offer service programs that provide automatic upgrades to your application development environment and higher levels of technical support. Visit **ni.com/ssp**.

## Hardware Services

### NI Factory Installation Services

NI Factory Installation Services (FIS) is the fastest and easiest way to use your PXI or PXI/SCXI combination systems right out of the box. Trained NI technicians install the software and hardware and configure the system to your specifications. NI extends the standard warranty by one year on hardware components (controllers, chassis, modules) purchased with FIS. To use FIS, simply configure your system online with **ni.com/pxiadvisor**.

### Calibration Services

NI recognizes the need to maintain properly calibrated devices for high-accuracy measurements. We provide manual calibration procedures, services to recalibrate your products, and automated calibration software specifically designed for use by metrology laboratories. Visit **ni.com/calibration**.

### Repair and Extended Warranty

NI provides complete repair services for our products. Express repair and advance replacement services are also available. We offer extended warranties to help you meet project life-cycle requirements. Visit **ni.com/services**.

NATIONAL INSTRUMENTS™

**ni.com • (800) 813 3693**
National Instruments • info@ni.com



2005-6218-301-101